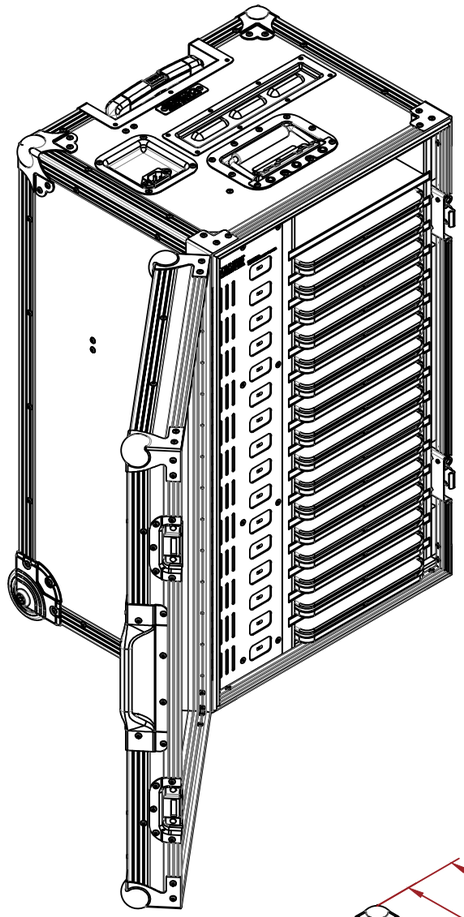

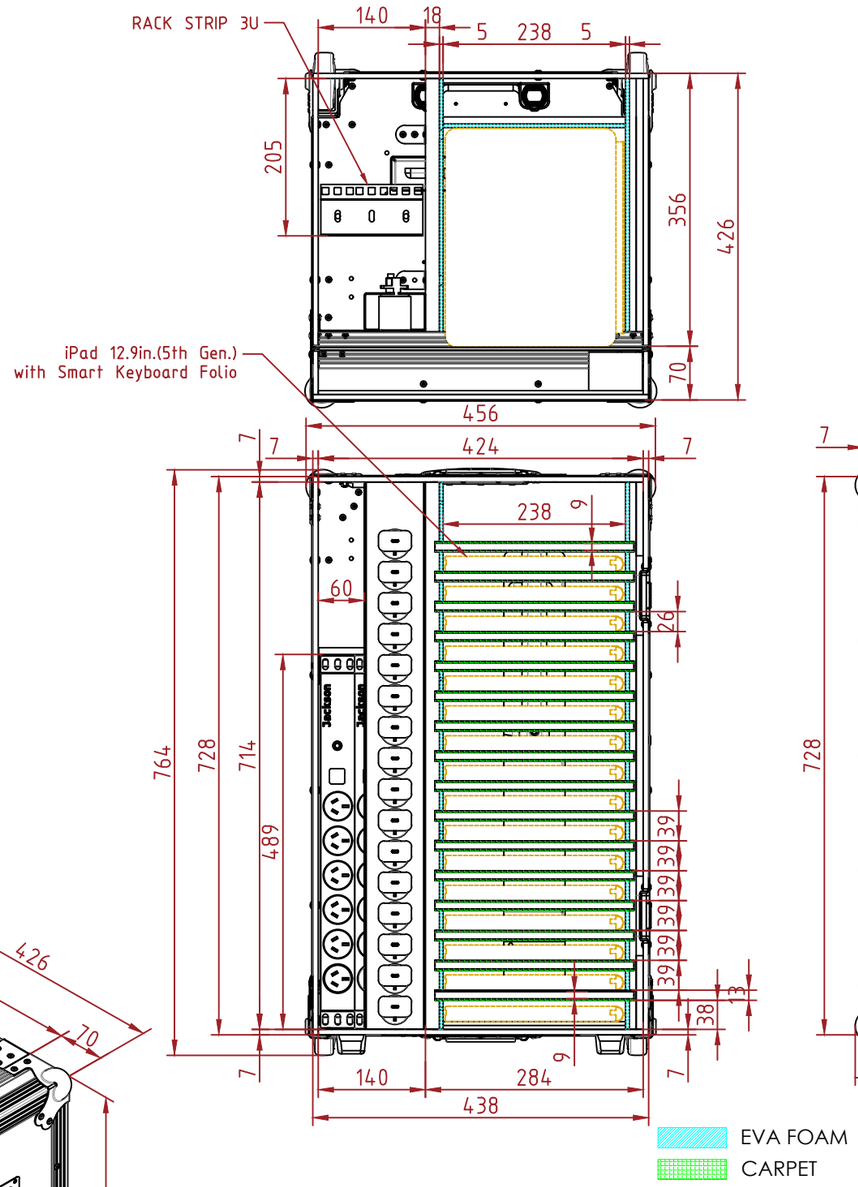

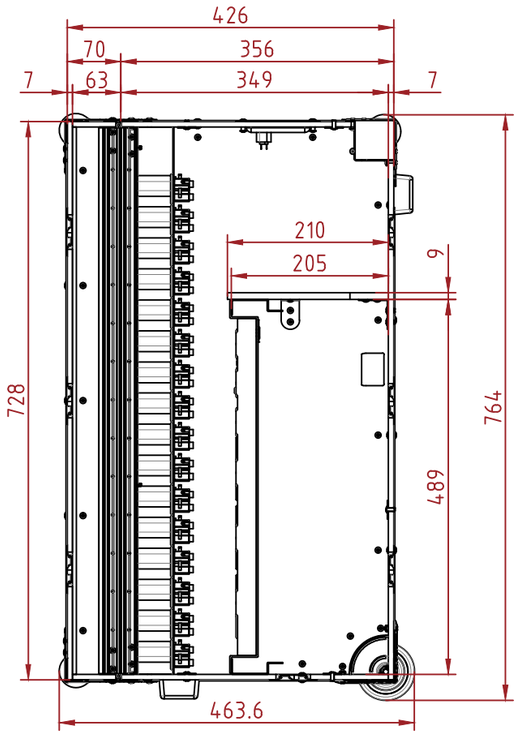

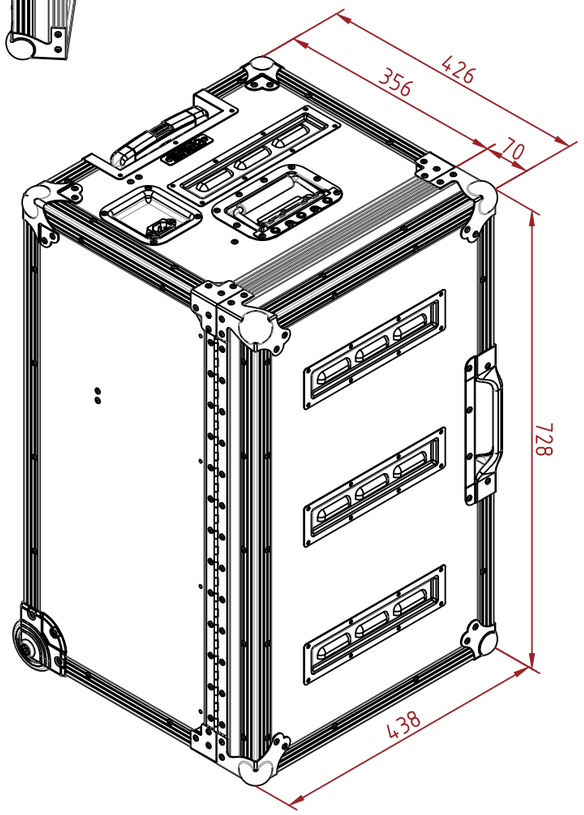

ITEM NO.	DESCRIPTION	PART NUMBER	QTY.
1	BRACES	B1123	4
2	BRACES	B4602	6
3	BALL CORNERS	C1992	2
4	BRACE BALL CORNER	C3151	4
5	LATCHES	L2208	2
6	RECESSED HANDLE	H1101	2
7	CORNER HANDLE	H2026	1
8	PULL OUT HANDLE	H4116	1
9	VENT PANEL	G1560	5
10	PUNCHED DISH	D0946-10	2
11	FLIGHT PANEL 7mm	F701A	1
12	PLYWOOD PANEL 9mm	P901B	1
13	PLYWOOD PANEL 18mm	P1801	1
14	SINGLE ANGLE EXTRUSION	E-SA30	2
15	EDGE EXTRUSION	EH7	2
16	PIANO HINGE	P-38	1
17	CASTOR	CARJET X5	2
18	FEET	F3852	2
19	POWERBOARD	JACKSON-1U	1
20	POWERBOARD	JACKSON-2U	1
21	RACK STRIP	R7101-3U	2
22	AS/NZS 3112 AC POWER CORD		16
23	USB TYPE C CHARGER 20W		16
24	FLUSH MOUNT POWER SOCKET		16
25	IEC-C14 INLET MALE POWER PLUG		1
26	LOW PROFILE SOCKET HEAD SCREW M6X20mm		6
27	SLEEVE NUT M6		6

NOTES:

CUSTOMER: Gippsland Tech School

DUE DATE: February 1, 2022

QUANTITY: 2

PANEL FINISH: F701A

HARDWARE: ARMOR & PENN

DRAWING: CS-IPADP Case

DRAWN BY: RP

CHECKED BY: AS

SCALE: NTS

REVISION: 0

ADD : 45/7-9 Percy St,Auburn,
NSW 2144, Australia
PH : 02 9188 6801
MAIL : sales@armorcases.com.au
WEB : www.armorcases.com.au