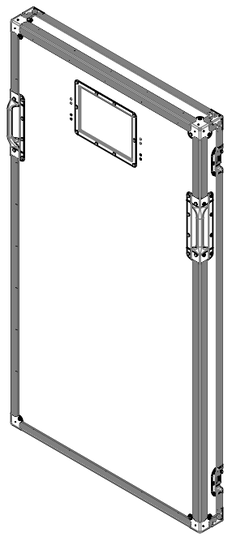

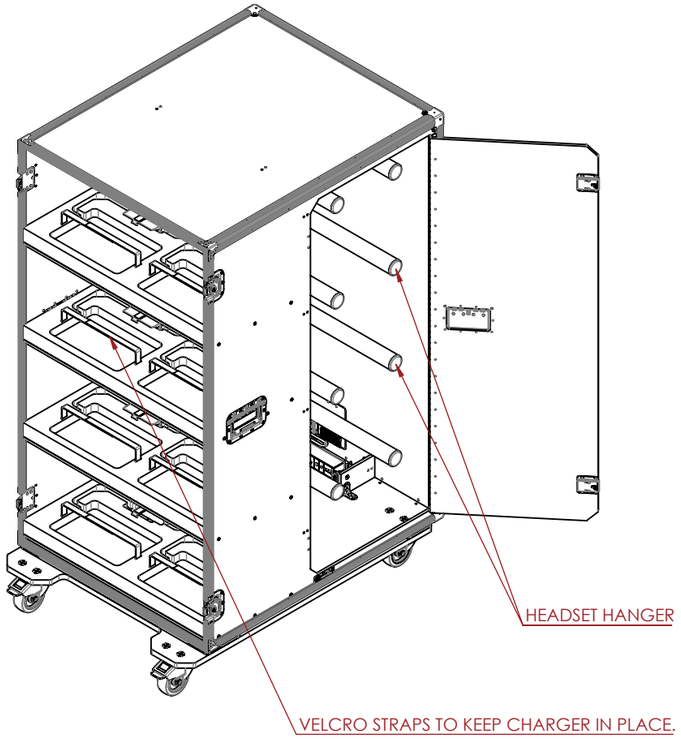

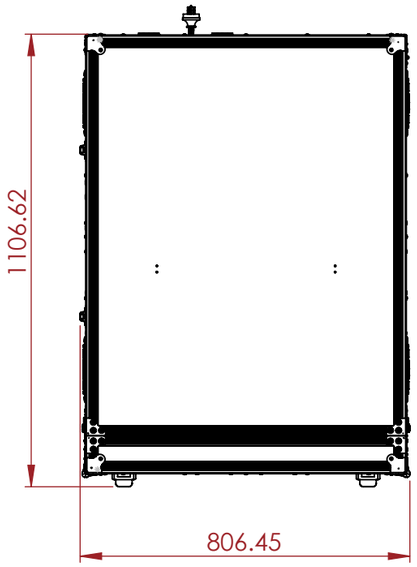

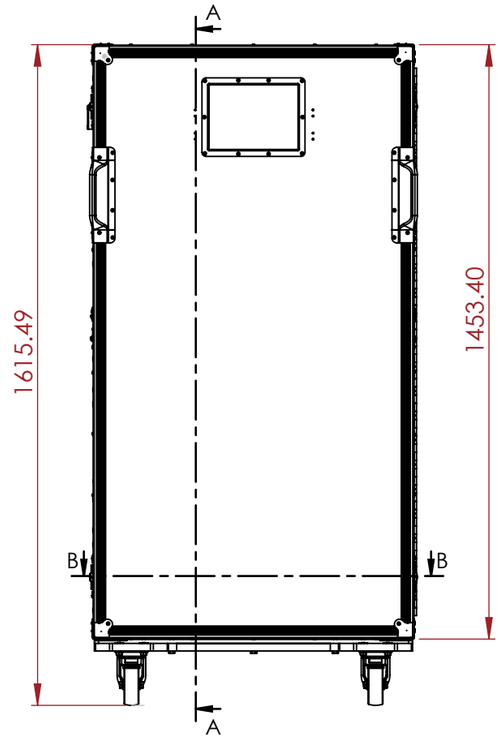

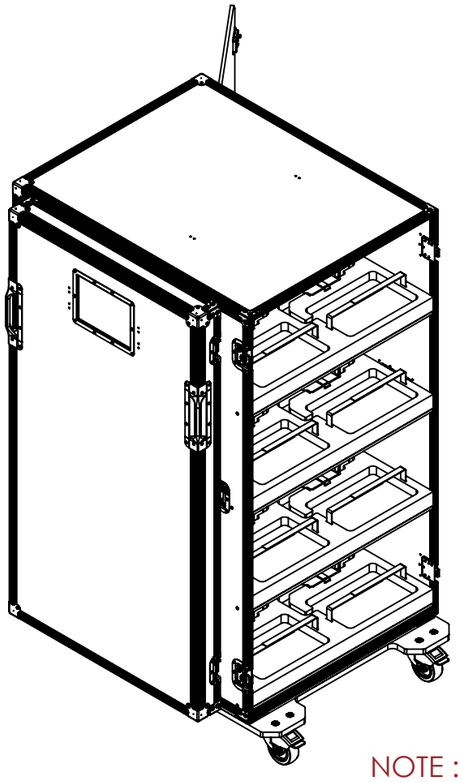

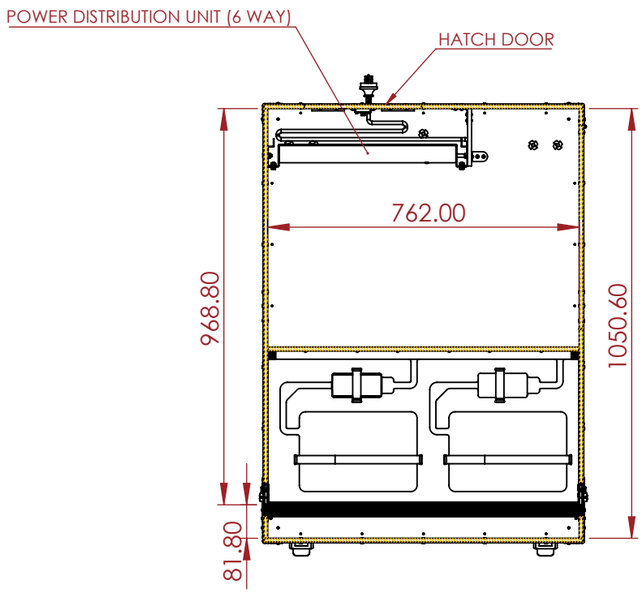

SECTION B-B

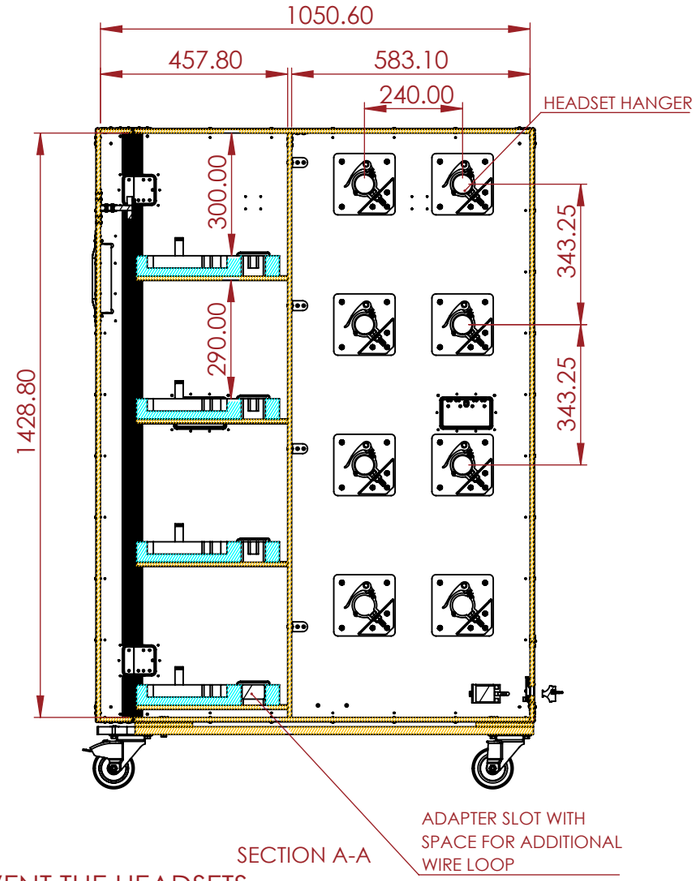

SECTION A-A

NOTE : ROUND PIPE C50 SHOULD HAVE A LENGTH OF 747.50MM TO PREVENT THE HEADSETS FROM FALLING OFF WHEN DOOR IS CLOSED

NOTES:

REV	DESCRIPTION	DATE
0	ORIGINAL ISSUE	10/31/2022

ESTIMATED WEIGHT (CASE ONLY):
103.30 KG

QUANTITY:
1

ITEM CODE:
FOL-FERA-RADIO

DRAWN BY: K.I
CHECKED BY: AS

SCALE: NTS

ARMOR
BUILT TO PROTECT

ADD : 45/7-9 Percy St,Auburn, NSW 2144, Australia
PH : 02 9188 6801
MAIL : sales@armorcases.com.au
WEB : www.armorcases.com.au