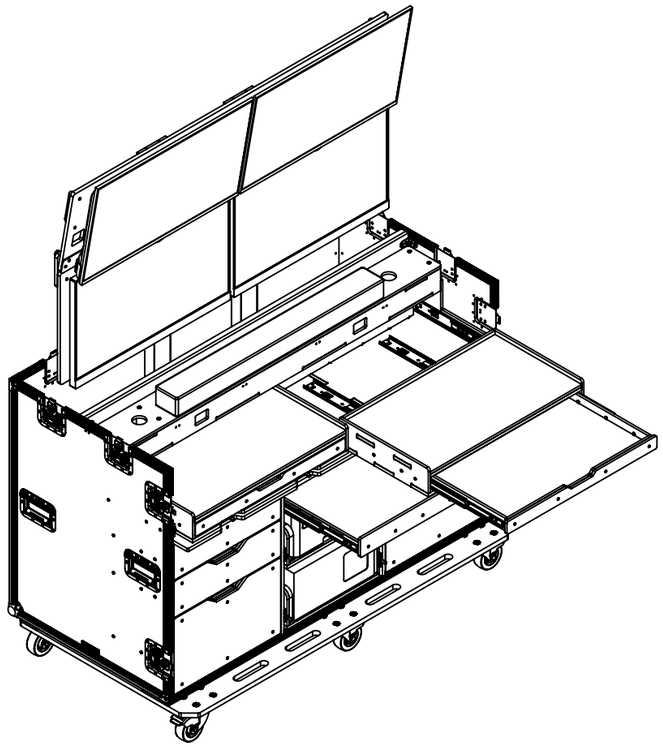

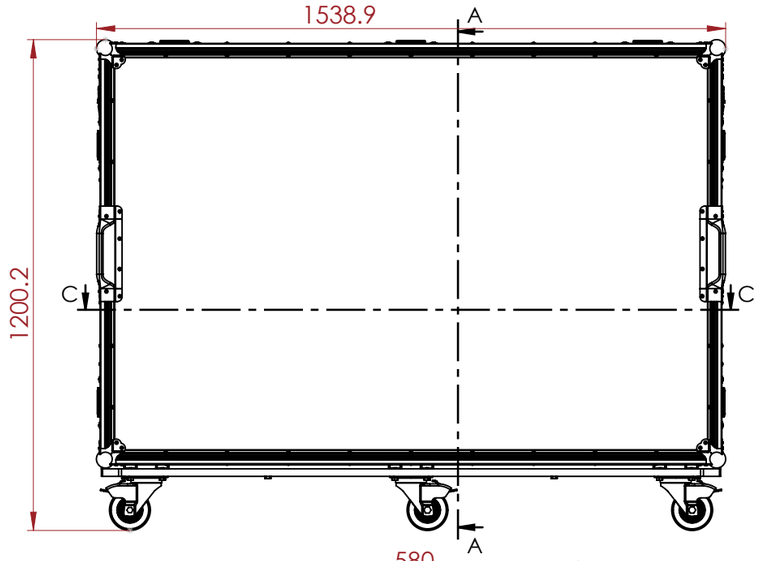

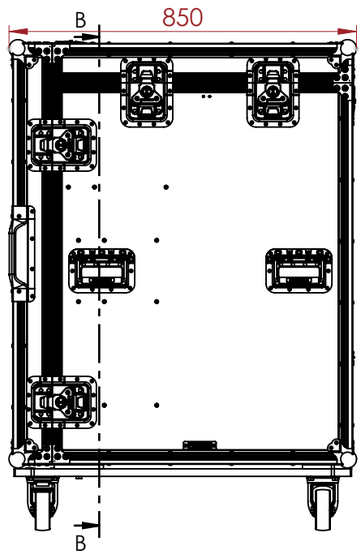

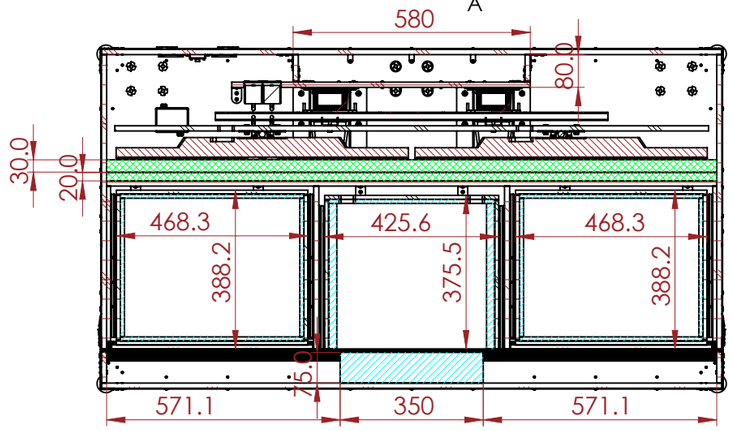

SECTION C-C

EVA FOAM

EPE 25 FOAM

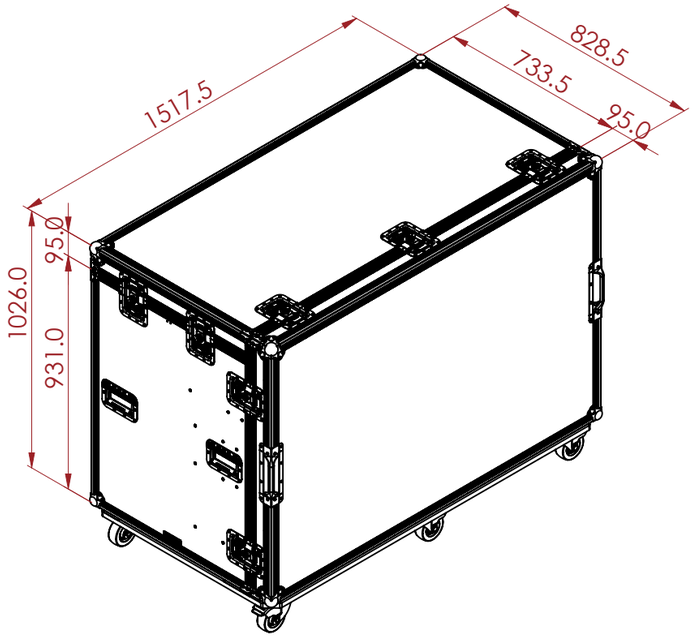

Monster 2.1.2 Channel Dolby Atmos Soundbar(MT-SB512DA)

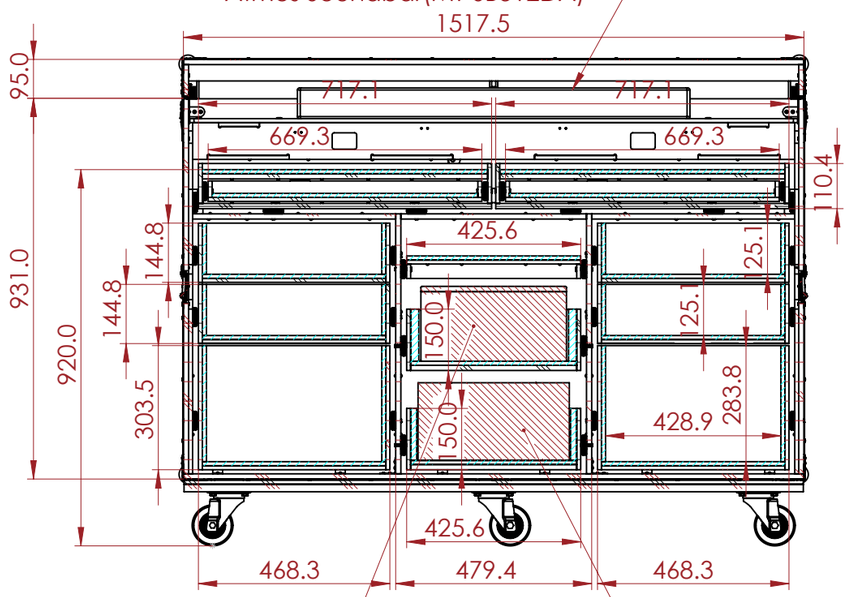

Brother HL-L2350DW laser printer

SECTION B-B

Monster 2.1.2 Channel Dolby Atmos Subwoofer(MT-SB512DA)

LG Ultragear QHD-32" (32GP750-B)

TCL 32S615-AU

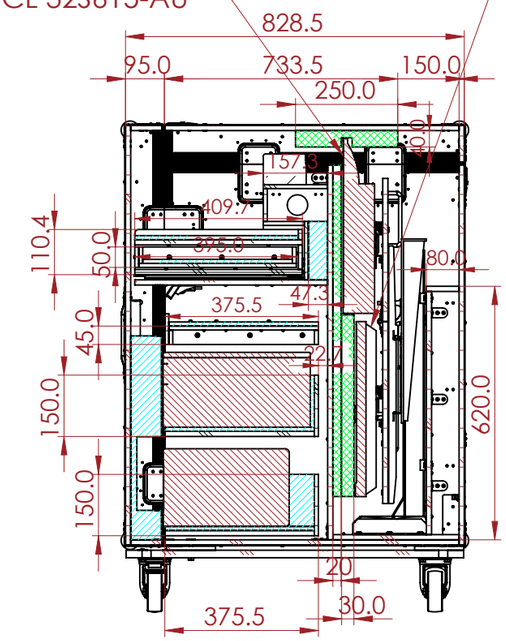

SECTION A-A

NOTES:

REV	DESCRIPTION	DATE
0	ORIGINAL ISSUE	31/08/2023

ESTIMATED WEIGHT (CASE ONLY):
253.82 KG

QUANTITY:
1

ITEM CODE:
WS-FP3-SL4

DRAWN BY: RP

CHECKED BY: AS

SCALE: NTS

ARMOR
BUILT TO PROTECT

ADD : 45/7-9 Percy St,Auburn, NSW 2144, Australia
PH : 02 9188 6801
MAIL : sales@armorcases.com.au
WEB : www.armorcases.com.au