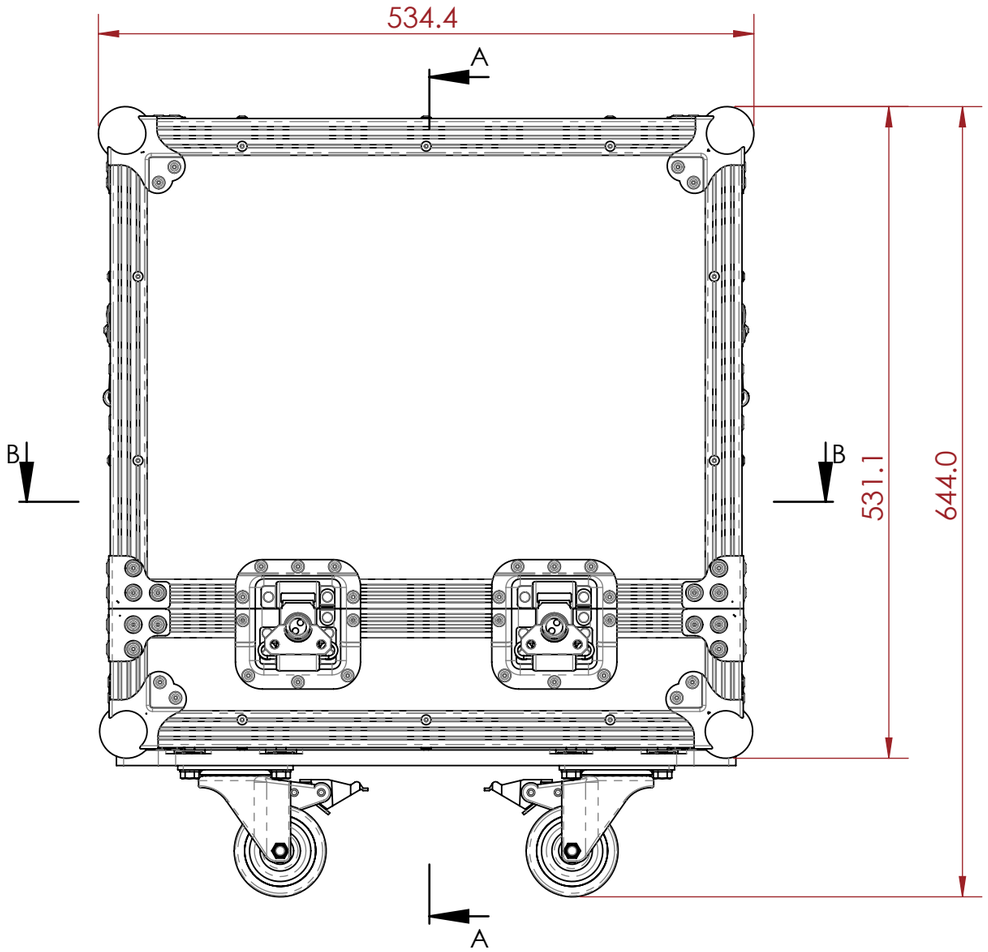

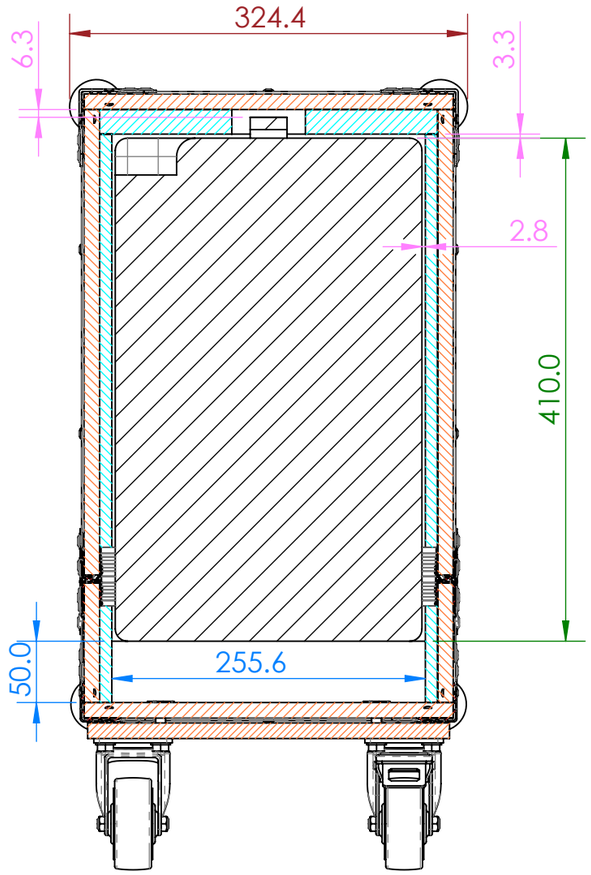

SECTION A-A

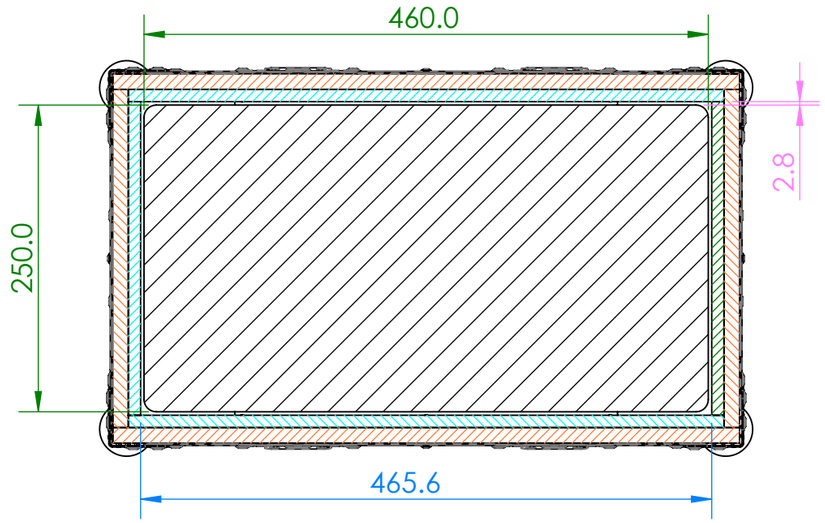

SECTION B-B

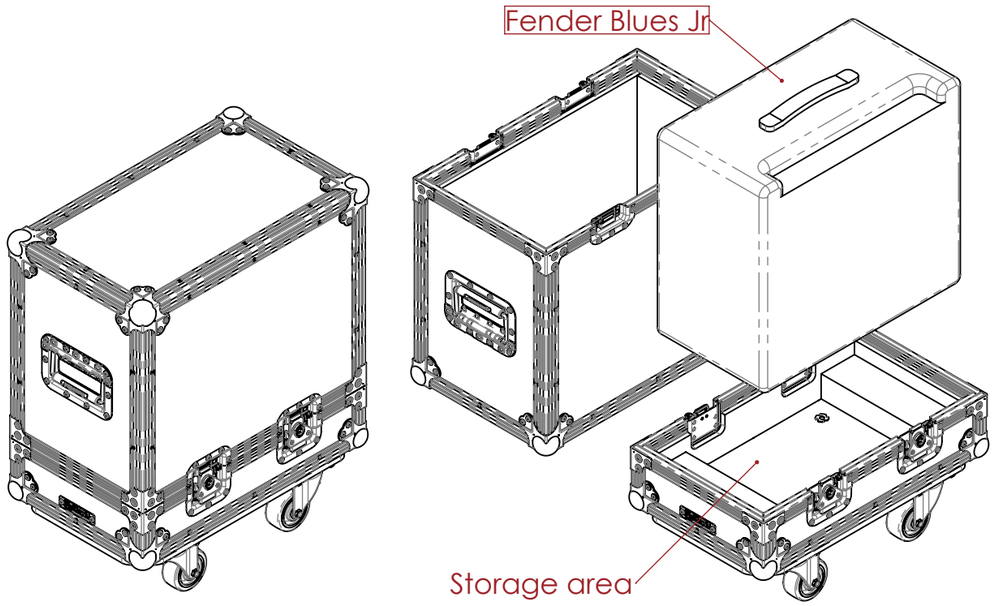

NOTES:

UNLESS SPECIFIED IN THE DRAWING, ALL PRODUCTS DISPLAYED IN THIS DRAWING OTHER THAN THE CASE ITSELF IS NOT PART OF OUR PRODUCT OFFERING.

- CARPET
- EVA FOAM
- PLYWOOD
- EXTERNAL DIMENSIONS
- INTERNAL DIMENSIONS
- TOLERANCES
- EQUIPMENT DIMENSIONS
- EPE 25 FOAM

REV	DESCRIPTION	DATE
0	ORIGINAL ISSUE	10/31/2022

ESTIMATED WEIGHT (CASE ONLY):
18.62 KG

ITEM CODE:
AMP-FNDR-BJ-P12

DRAWN BY: HA

CHECKED BY: AS

SCALE: NTS

ARMOR
BUILT TO PROTECT

MAIL : sales@armorcases.com.au
WEB : www.armorcases.com.au