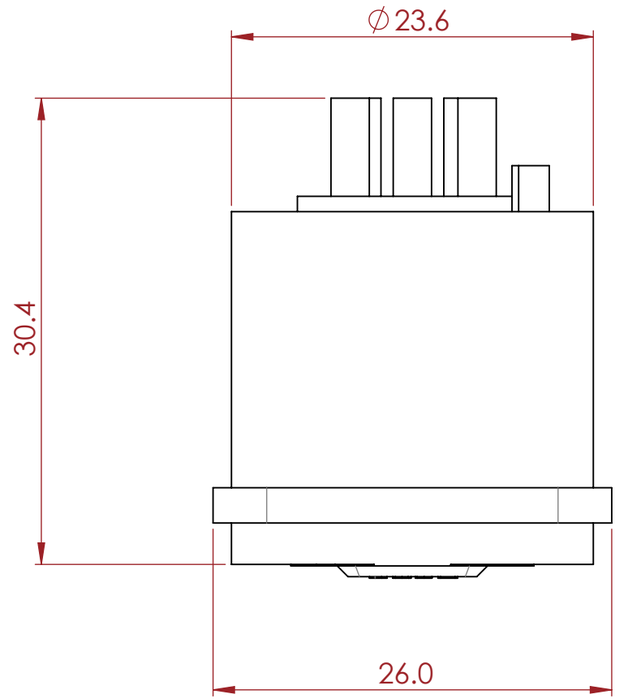

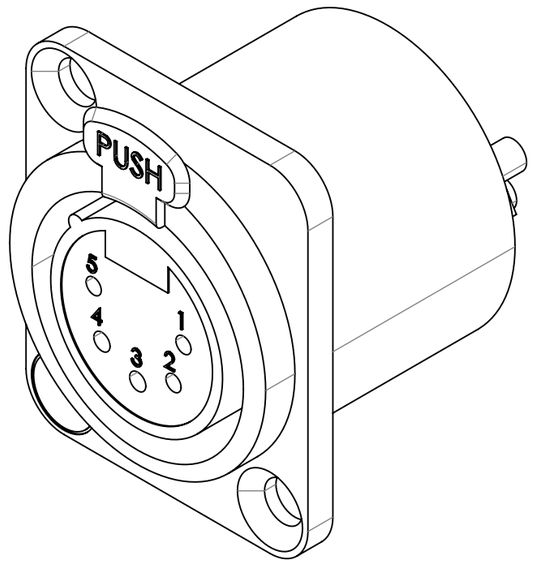

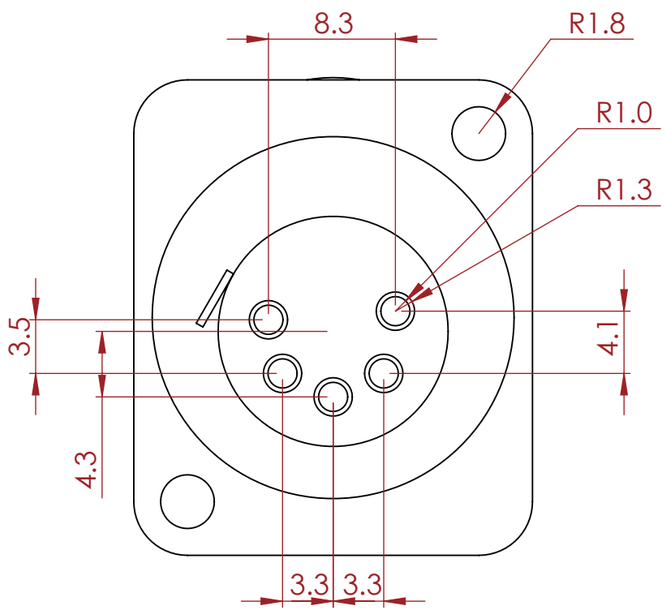

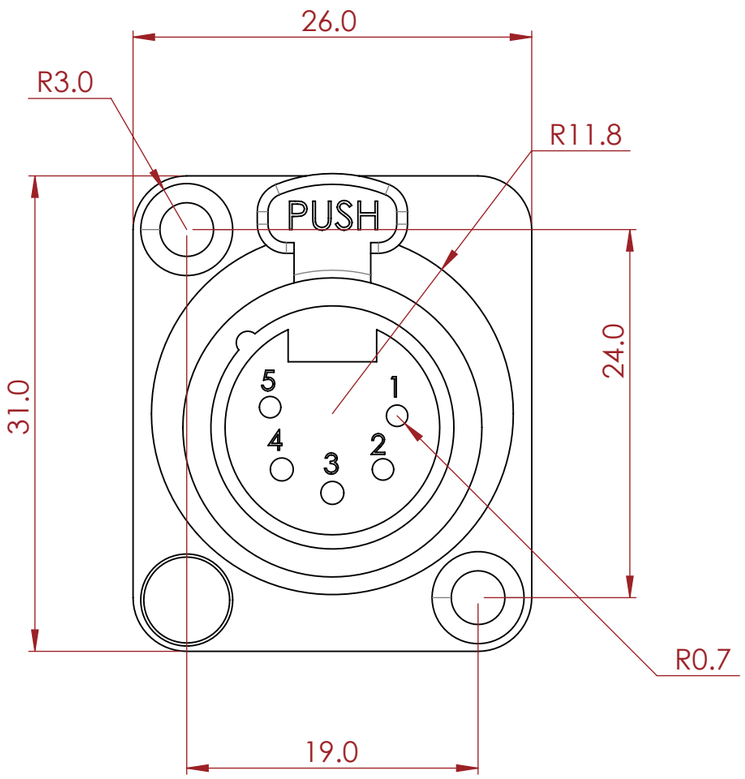

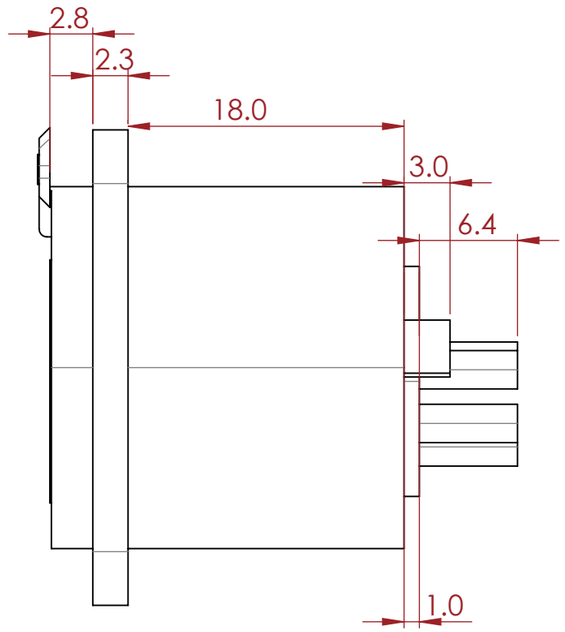

NOTES:

REV	DESCRIPTION	DATE
0	ORIGINAL ISSUE	10/31/2022

HARDWARE WEIGHT
0.023 KG

HARDWARE MATERIAL

ITEM CODE:
DATA-D-DMX-F5

DRAWN BY: CHECKED BY:

SCALE:
NTS

ARMOR
BUILT TO PROTECT

ADD : 45/7-9 Percy St,Auburn, NSW 2144, Australia
PH : 02 9188 6801
MAIL : sales@armorcases.com.au
WEB : www.armorcases.com.au